RoHS

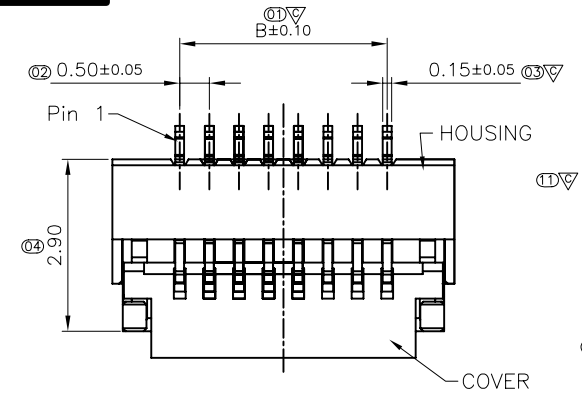


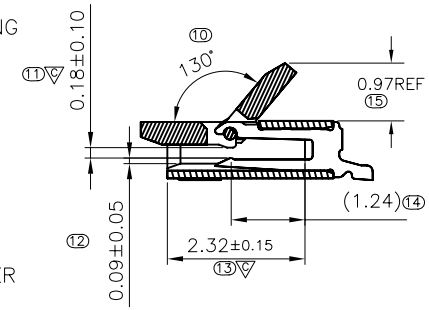


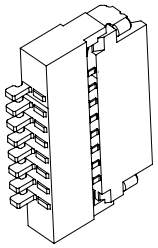

NOTES:
1. MATERIAL:
   HOUSING: LCP UL 94-V0,COLOR:Natural;
   COVER: LCP UL 94-V0,COLOR:Black;
   CONTACT: Phosphor Bronze.
   LEG:Brass.
2. PLATING:
   CONTACT: GOLD FLASH.
   LEG: TIN PLATED ON NICKEL OVERALL.
3. RATING:
   CURRENT RATING: 0.4A AC/DC
   VOLTAGE RATING: 50V AC/DC
   TEMPERATURE RANGE: -55°C~+85°C;
4. PART NO:
   FP0510-0XX X X ZM
   - PACKING: 0:TAPE & REEL, 1:TUBE
   - PLATING: O=Tin G=Gold flash
   - PIN

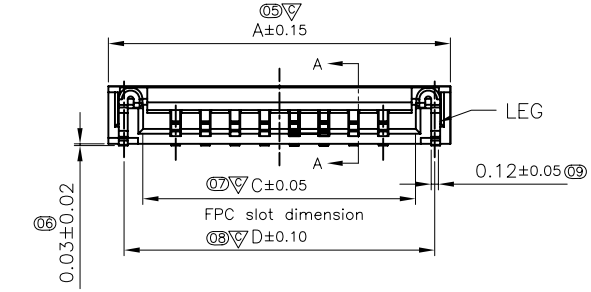


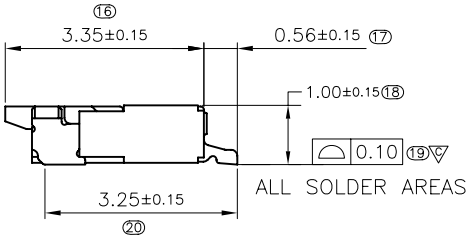


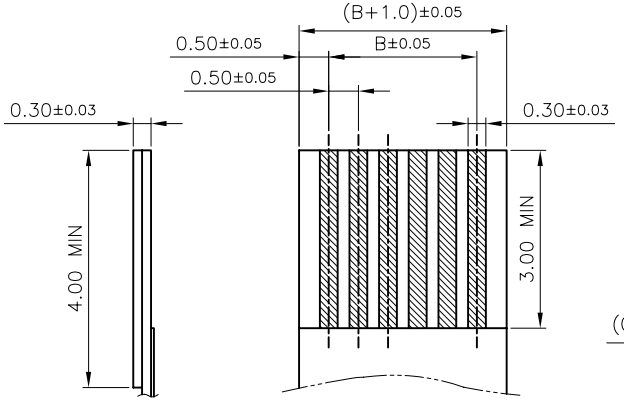


Applicable FPC

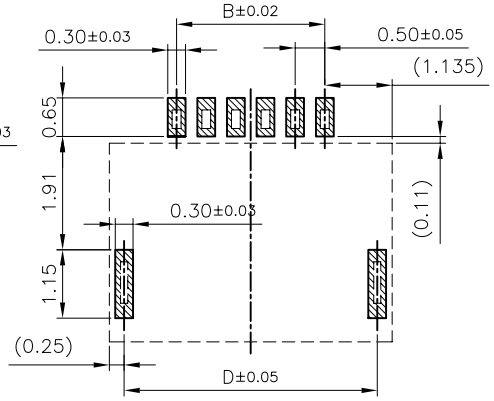


RECOMMEND PCB LAYOUT
TOLERANCE:±0.05

| PIN NO. | DIM. A | DIM. B | DIM. C | DIM. D | PIN NO. | DIM. A | DIM. B | DIM. C | DIM. D |
|---|---|---|---|---|---|---|---|---|---|
| **04** | **3.77** | **1.50** | **2.60** | **3.27** | 23 | 13.27 | 11.50 | 12.10 | 12.77 |
| 05 | 4.27 | 2.00 | 3.10 | 3.77 | **24** | **13.77** | **11.50** | **12.60** | **13.27** |
| **06** | **4.77** | **2.50** | **3.60** | **4.27** | 25 | 14.27 | 12.00 | 13.10 | 13.77 |
| 07 | 5.27 | 3.00 | 4.10 | 4.77 | 26 | 14.77 | 12.50 | 13.60 | 14.27 |
| 08 | 5.77 | 3.50 | 4.60 | 5.27 | 27 | 15.27 | 13.00 | 14.10 | 14.77 |
| 09 | 6.27 | 4.00 | 5.10 | 5.77 | 28 | 15.77 | 13.50 | 14.60 | 15.27 |
| 10 | 6.77 | 4.50 | 5.60 | 6.27 | 29 | 16.27 | 14.00 | 15.10 | 15.77 |
| 11 | 7.27 | 5.00 | 6.10 | 6.77 | 30 | 16.77 | 14.50 | 15.60 | 16.27 |
| **12** | **7.77** | **5.50** | **6.60** | **7.27** | 31 | 17.27 | 15.00 | 16.10 | 16.77 |
| 13 | 8.27 | 6.00 | 7.10 | 7.77 | 32 | 17.77 | 15.50 | 16.60 | 17.27 |
| 14 | 8.77 | 6.50 | 7.60 | 8.27 | 33 | 18.27 | 16.00 | 17.10 | 17.77 |
| 15 | 9.27 | 7.00 | 8.10 | 8.77 | 34 | 18.77 | 16.50 | 17.60 | 18.27 |
| 16 | 9.77 | 7.50 | 8.60 | 9.27 | 35 | 19.27 | 17.00 | 18.10 | 18.77 |
| 17 | 10.27 | 8.00 | 9.10 | 9.77 | 36 | 19.77 | 17.50 | 18.60 | 19.27 |
| 18 | 10.77 | 8.50 | 9.60 | 10.27 | 37 | 20.27 | 18.00 | 19.10 | 19.77 |
| 19 | 11.27 | 9.00 | 10.10 | 10.77 | 38 | 20.77 | 18.50 | 19.60 | 20.27 |
| 20 | 11.77 | 9.50 | 10.60 | 11.27 | 39 | 21.27 | 19.00 | 20.10 | 20.77 |
| 21 | 12.27 | 10.00 | 11.10 | 11.77 | 40 | 21.77 | 19.50 | 20.60 | 21.27 |
| 22 | 12.77 | 10.50 | 11.60 | 12.27 | n | n*0.5+1.77 | (n-1)*0.5 | n*0.5+0.6 | n*0.5+1.27 |

| TOLERANCE UNLESS SPECIFIED | |
|---|---|
| LINEAR | ANGLE |
| .X ±0.38 | X° ±5° |
| .XX ±0.25 | .X° ±3° |
| .XXX±0.10 | .XX° ±-- |

| | | |
|---|---|---|
| DATE 20131007 | DAR. BY | |
| SCALE 1/1 | CHK. BY | |
| UNIT mm | APP. BY | |

CEMG RUN YUAN TECHNOLOGY CO.,LTD

TITLE: 0.5PH 1.0H FPC Connector

DWG NO. FP0510-0XXXXZM

REV. A